Installer note: After installation, tear along perforations indicated and retain this section - only leave the User instructions with the end user

Drayton Lifestyle

SERVICE INTERVAL

SINGLE CHANNEL	DUAL CHANNEL
Timeswitch	Programmer
for heating OR hot water	for heating OR hot water



LP111Si, LP711Si



LP241Si, LP522Si, LP722Si

SINGLE CHANNEL | **DUAL CHANNEL**

Installation Instructions

064900500001 ISS K

Technical Helpline: **0333 6000 622**
Email: **customer.care@draytoncontrols.co.uk**
Web: **www.draytoncontrols.co.uk**

INSTALLATION INSTRUCTIONS

PLEASE NOTE: INSTALLATION MUST ONLY BE CARRIED OUT BY A QUALIFIED ELECTRICIAN OR HEATING ENGINEER.
MAKE SURE MAINS INPUT HAS A 3 AMP FUSE.

TECHNICAL DATA

LP241Si, LP522Si & LP722Si PROGRAMMERS LP111Si & LP711Si TIMESWITCHES	
Voltage	230V a.c. +10% - 10% 50Hz
Programmer Rating	2 (1) A 230V a.c. each switch
Timeswitch Rating	2 (1) A 230V a.c.
Ambient temp	Operating: 0º to 45ºC Storage: -20ºC to 50ºC
Without mains power	Display: blank Time: always kept Program times: always preserved
Programming resolution	1 minute
Wiring	Fixed wiring only, to comply with current IEE regulations
Maintenance	Must be maintained by a qualified electrician or heating engineer
Pollution degree	2
Software class	2
Ball pressure test temperature	75ºC
Rated impulse voltage	2.5kV

Lifestyle Programmers and Timeswitches conform to the essential requirements of these Directives:

2014/30/EU - Electromagnetic compatibility Directive
2014/35/EU - Low Voltage Directive
2012/19/EU - WEEE Directive
2006/66/EC - Battery Directive

UK CA CE

BEFORE INSTALLATION

First, make sure the mains supply is switched off!

PROGRAMMER ONLY

The programmer must be set to the type of system it is to control. The link on the back of the unit has two settings – P and G.

P = a fully pumped and controlled system– allowing heating and hot water to be set separately.

G = a gravity-fed hot water system – which does not allow independent setting of heating without hot water, though hot water can be controlled alone.

USING AN EXISTING WALL-PLATE

Loosen the securing screws on the old programmer and unplug it. Check that there's 70mm clearance to the right of the wall-plate, and 25mm above it. Check the chart on the next page to compare terminals and if necessary, change the wiring of the wall-plate to suit. Now plug the Lifestyle unit into the wall-plate and tighten the securing screws.

Check the 3A fuse, and switch on the mains.

FITTING A NEW WALL-PLATE

The ideal location is 1.4m above floor level, with reasonable lighting, good access, no condensation, no extremes of temperature, and a supporting surface that fully covers the back of the unit.

Position with 70mm clearance to the right, 25mm above, and sufficient room to access the securing screws underneath.

Fix, with terminals at the top, either direct to a flat wall using wall plugs and No. 6 x 1" (25mm) woodscrews, or on a flush mounting single conduit box type UA1 (BS4662) using M3.5 x 14 bolts. DO NOT USE A SURFACE MOUNTING BOX.

TIMESWITCH TERMINAL COMPARISONS

MAKE	MODEL	Earth	Neutral	Live	Common	On	Off	Spare
Current Models								
Drayton	Tempus 1, 2 (new models)		N	L	1	2	3	4
Drayton Lifestyle	LP111, LP711, LP111Si, LP711Si		N	L	1	2	3	4
Switchmaster	300		N	L	4	1		
Discontinued/Competitors'Models								
ACL	TC (Towerchron)		2	1	4	7		
Drayton	SM1		N	L	1	2	3	4
Drayton	miGenie Wish 1		N	L	1	2	3	4
Drayton	MiTimeMT711R, MiTime RF Pack1		N	L	1	2	3	4
Drayton	Tempus 1, 2 (old models)		N	L	1	2	3	4
Switchmaster	980		N	L	4	1		
British Gas	EMT2, UT1, UT2		N	L	1	3	2	4
Danfoss Randall	TS15, 75 (Mk18)	E	N	L	1	4	2	5/6
Danfoss Randall	TS715, TS715Si		N	L	1	4	2	3
Danfoss Randall	TS975	E	N	L	5	4	6	1,2,3
Danfoss Randall	SET1, SET1E	E	N	L	5	4	6	
Danfoss Randall	SET4	E	N	L	5	4	6	
Danfoss Randall	103, 103E, 103E5, 103E7	4	5	6	3	1		2
Danfoss Randall	911, 971	E	N	L	5	6	4	2
Grasslin Towerchron	QE1		N	L	2	4		
Grasslin Towerchron	T2001, T2001Q	E	N	L		7		
Honeywell	ST 6100A, ST 6100C		N	L	1	4	2	
Honeywell	ST 7000B		N	L	1	2	3	4
Horstmann	Centaur SC1, SC7			L		3	2	
Horstmann	Centaur Plus, C11, C17, C17-ZW		N	L	2	4	3	
Horstmann	Emerald 423, Pearl Auto		N	L	2	4	3	
Horstmann	517, Coronet, H11, H17	E	N	L	3	4		
Landis & Staefa	RWB3		N	L		4	3	
Landis & Staefa	RWB30, RWB50, 100, 152, 170		N	L	4	4	3	
Landis & Staefa	RWB7	E	N	L	2	4	3	
Myson	Mictrotimer (link L-5 and 5-8)		E	N	L	5	4	6
Myson	MEP9C		N	L	1	3	2	4
Potterton Myson	EP4000, 4001, 4002, 5002		N	L	5	4	2	
Salus	EP101, SP120		N	L	4	3		
Sangamo	M6			E	4	6	3	1
Smiths	Controller Mk1, Mk2		N	L	3	2		
Smiths	Controller 30		1	2		3/4		
Smiths	Controller 300, 980		N	L	4	1		
Sunvic	Select 107, SunPro1000		N	L	1	3	2	4
Sunvic	SP20, SP35		N	L	3	5	4	5
Venner	Vennerette		N	L	LINE	LOAD		

PROGRAMMER TERMINAL COMPARISONS

MAKE	MODEL	Earth	Neutral	Live	Ch1 on	Ch2 on	Ch3 on	Ch4 on
Current Models								
Drayton	Tempus 3, 4, 6,7 (old models), Tempus 6,7		N	L	1	2	3	4
Drayton Lifestyle	LP112, LP241, LP522,LP722		N	L	1	2	3	4
Switchmaster	400, 600 (no connection to terminal 4 on 600)		N	L		4	3	1
Switchmaster	805, 900, 900i		N	L	4	2	3	1
Discontinued/Competitors'Models								
ACL	MP (Towerchron)		2	1				
ACL	FP (Towerchron)		2	1	8	11	6	10
Drayton	SM2		N	L	1	2	3	4
Drayton	miGenie Wish 2		N	L	1	2	3	4
Drayton	MiTime MT721R, MiTimeRF Pack 2 & 3		N	L	1	2	3	4
British Gas	EMP2, UP1, UP2		N	L	1	2	3	4
Danfoss Randall	CP15, CP715, FP15, FP715 (Mk18)	E	N	L	1	2	3	4
Danfoss Randall	3020P, 3060	E	7	6			4	2
Danfoss Randall	4033 (link 1-6)	E	7	6	5	3	4	2
Danfoss Randall	102, 102E, 102E5, 102E7 (link 6-3)	E	5	6			1	2
Danfoss Randall	701 (link L-5 and 5-6)	E	N	L			3	1
Danfoss Randall	702 (link L-5 and 5-6)	E	N	L	4	2	3	1
Danfoss Randall	922, 972 (link L-2 and 2-5)	E	N	L	1	4	3	6
Danfoss Randall	SET2, SET2E, SET3E, SET3M, FP975, SET5 (link L-2 and 2-5)	E	N	L	3	6	1	4
Grasslin Towerchron	DP 72, QE2		N	L	1	2	3	4
Honeywell	ST 699/799 (link L-5 and 5-8)		N	L	7	4	6	3
Honeywell	ST 6200, ST 6400, ST 6450		N	L	1	2	3	4
Honeywell	ST 7100 (link L-3 and 3-6)		N	L	7	4	8	5
Horstmann	525, 527, 425 Diadem, H21, H27, H121, Tiara (link L-2 and 2-5)	E	N	L	3	6	1	4
Landis & Staefa*	RWB2, RWB2E, 20, 40, 102, 200, 252 & 270, RWB9		N	L	1	2	3	4
Myson	Mictrotimer (link L-5 and 5-8)		N	L	7	4	6	3
Myson	MEP2C		N	L	1	2	3	4
Potterton Myson	All EP2000's, EP3000's, EP6000's, (link L-5 and N-N)		N	L	1	2	3	4
Potterton Myson*	Mini Minder		N	L	1	2	3	4
Salus	EP200, SP220		N	L	1	2	3	4
Sangamo	M5 (link 1-6)		N	L			1	8
Sunvic	Select 207, SunPro 2000		N	L	1	2	3	4
Sunvic	SP50, SP100 (LIN, L-3)		N	L	1	4	2	5

**Can simply be removed from the backplate and replaced without any disturbance to the existing wiring.*

WIRING THE TIMESWITCH

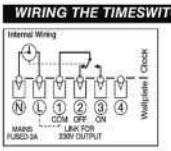

Make the wiring connections as above. Note that the output contacts are voltage-free, so power needs to be put on to Terminal 1 either by linking from Terminal L or from a separate supply with a 3A *fuse*.

WIRING THE PROGRAMMER

USING A DRAYTON SIMP-L-FIT, ALTHOUGH NOT NECESSARY, WILL MAKE THIS INSTALLATION EASIER

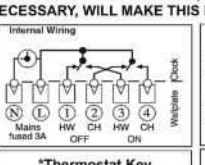

CONNECTON CHARTS

Arrowed numbers relate to the junction box.

Consult boiler handbook for details of pump overrun wiring.

***Thermostat Key**

C Common
H Call for Heat
S Satisfied
N Neutral
E Earth
L Live

Wiring Colour Codes

GR	Grey
Y	Yellow
BK	Black
BL	Blue
BR	Brown
RD	Red
W	White
OR	Orange
YG	Yellow/Green

Installer note: After installation, tear along perforations indicated and retain this section - only leave the User instructions with the end user

Drayton Lifestyle

SERVICE INTERVAL

SINGLE CHANNEL Timeswitch — for heating **OR** hot water

DUAL CHANNEL Programmer — for heating **OR** hot water



LP111Si, LP711Si



LP241Si, LP522Si, LP722Si

SINGLE CHANNEL | DUAL CHANNEL

User's Instructions

06490050001 ISS K

Technical Helpline: **0333 6000 622**
Email: **customer.care@draytoncontrols.co.uk**
Web: **www.draytoncontrols.co.uk**

User's Instructions
TIMESWITCHES

INTRODUCTION

Lifestyle Timeswitches will automatically control your system by switching it on and off at times that suit you. The light on the front of the timeswitch shows when it's on.

- LP111Si – a 24hr program, up to 3 heating periods each day, and every day the same.
- LP711Si – a 7-day program, allowing for different timings on each day of the week, up to 3 heating periods each day.

If the engineer hasn't set your timings for you, your timeswitch will work with a standard program that has been set at the factory. If this doesn't suit you, it's very easy to change it – when you've read this introductory section, simply turn to the page for your timeswitch model.

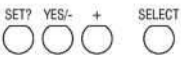

Remember:

- Make your changes using the SET?, YES/-, and + buttons on the programmer, found under the bottom flap.
- You can't set ON1 as the last timing before midnight, but you can set OFF3 after midnight – providing it's not more than 23 hours and 59 minutes after ON1.
- You need to set the timings in sequence – i.e. ON1, OFF1, ON2, OFF2, ON3, OFF3. If you get out of sequence, the display will flash a warning.

SWITCHING
ON 1 – start of first timed period
OFF 1 – end of first timed period
ON 2 – start of second timed period
OFF 2 – end of second timed period
ON 3 – start of third timed period
OFF 3 – final switch-off of the day

If the engineer has set your program and timings – you won't need to do anything else. Just keep this guide in a safe place for future reference.

DAY-TO-DAY VARIATIONS

Sometimes you might need to change the way you use your system temporarily – perhaps due to an exceptionally cold day.
Here's how to do it – without affecting the timings in your program.

Switching on and off

On the front of the timeswitch there is an **Advance/Boost** button. It allows you to switch your system either on or off, irrespective of the program. So if the heating is off, and you want warmth now, you can either –

1. Press **Advance** to switch it on (ADV will be displayed), and it will stay on until the end of the next period. Or if the heating is on and you don't need it, press Advance and it will go off until the beginning of the next ON period.

   Advance will only operate in TIMED or ONCE modes.

2. Press & Hold **Boost** to switch on for an extra hour (*b1* & BST will be displayed), then Press again for two (*b2*) or three (*b3*) hours.
   To cancel Boost, Press Boost again (*b0*). Or if the heating is already on, using Boost will extend the ON time by one, two or three hours.

Over-riding the program

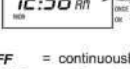

At the side of the display there are four operating modes:

OFF = continuously off.
TIMED = on for up to 3 periods a day.
ONCE = on for 1 period a day, from the start of ON1 to the end of OFF3.
ON = continuously on.

Use the SELECT button under the flap to change the mode. This won't alter the timings in your program, which you can return to by selecting TIMED.

THE LP111Si 24hr ELECTRONIC TIMESWITCH

LP111Si – a 24hr program, up to 3 heating periods each day, and every day the same.

Want to leaveatiming as it is? Just press SET? and move on to the next one.

If you need to reset your timings to the staard program and start again, press 'SET' and '+' together to go back to the pre-set program.

The standard program

Your system will come on for up to 3 heating periods every 24hrs. ON1 starts the first one, OFF1 finishes it, and so on. Notice that ON2 and OFF2 are set to the same time.* This means your system won't respond, but if you want to activate that middle period or change any other timings – read on.

SWITCHING	STANDARD PROGRAM
ON 1 – start of first timed period	6.30am
OFF 1 – end of first timed period	8.30am
ON 2 – start of second timed period*	12.00pm
OFF 2 – end of second timed period*	12.00pm
ON 3 – start of third timed period	4.30pm
OFF 3 – final switch-off of the day	10.30pm

Changing the timings

- Press the SET? button and you'll see 'SET PROG?'.



- Press the YES button, and you'll see ON1, the start of your first heating period. Adjust it in 1-minute steps using the – and + buttons. If the – and + buttons are held down, the time changes in 10-minute steps.



- Press SET?, and you'll see OFF1, the end of your first heating period. Adjust this in the same way, press SET? then repeat the procedure for ON2, OFF2, ON3 and OFF3



- When you press SET? after setting OFF3, the timeswitch will return to normal operation.

LP711Si – a 7-day program, allowing for different timings on each day of the week, up to 3 heating periods each day.

Want to leave a timing as it is? Just press SET? and move on to the next one.

If you need to reset your timings to the standard program and start again, press 'SET' and '+' together to go back to the pre-set program.

The standard program

Your system will come on for up to 3 heating periods every 24hrs. ON1 starts the first one, OFF1 finishes it, and so on. Notice that ON2 and OFF2 are set to the same time.* This means your system won't respond, but if you want to activate that middle period or change any other timings – read on.

SWITCHING	STANDARD PROGRAM	
	MON-FRI	SAT-SUN
ON 1 – start of first timed period	6.30am	7.00am
OFF 1 – end of first timed period	8.30am	9.00am
ON 2 – start of second timed period*	12.00pm	12.00pm
OFF 2 – end of second timed period*	12.00pm	12.00pm
ON 3 – start of third timed period	4.30pm	4.00pm
OFF 3 – final switch-off of the day	10.30pm	11.00pm

Changing the timings

- Press the SET? button and you'll see 'SET PROG?'.

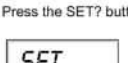

THE LP711Si 7-DAY ELECTRONIC TIMESWITCH Cont...

Set all weekdays

First you set the times that are going to be the same for each weekday, then you can select each day individually and make any further adjustments. If you want each day to be quite different, go straight to 'Set each day'.

- Press the YES button, and the display will ask 'SET MON to FRI PROG?'.



- Press YES and you'll see ON1, the start of your first heating period. Adjust it in 1-minute steps using the – and + buttons. If the – and + buttons are held down, the time changes in 10-minute steps.



- Press SET?, and you'll see OFF1, the end of your first heating period. Adjust this in the same way, press SET?, then repeat the procedure for ON2, OFF2, ON3 and OFF3.



Set each day

- If, after you've set OFF3 you want to fine-tune one or more weekdays, press SET? until you find the first day you want to adjust – then go through the procedure, altering any time you wish. Press SET? to move on to the next day. When you've finished, press SET? until you see 'SET SAT SUN PROG?'.



- If you don't want to alter any individual days, keep pressing SET? until you see 'SET SAT SUN PROG?'.

Set weekend



- Press YES and alter ON1, OFF1, ON2, OFF2, ON3 and OFF3 times in the same way.

Set each day

- If, after you've set OFF3 for both SAT & SUN, you want to fine-tune Saturday or Sunday, press SET? until you find the first day you want to adjust – then go through the procdure, altering any time you wish. Press SET? to move on to the next day. When you press SET? after setting your hot water for Sundays, the pro-grammer will go back to normal operation.



- If you don't want to alter either day, keep pressing SET? untill the programmer goes back to normal operation.

User's Instructions
PROGRAMMERS

If the engineer has set your program and timings – you won't need to do anything else. Just keep this guide in a safe place for future reference.

INTRODUCTION

Lifestyle Programmers will automatically switch your central heating and hot water on and off at times that suit you. Depending on your system, central heating and hot water can either both come on and off at the same time, or work independently. The light on the front of the programmer shows when each one is on.

There are 3 models in the Lifestyle range:

- LP241Si – a24hr program, with central heating and hot water working independently for up to 3 heating periods each day, and every day the same.
- LP522Si – a 5/2-day program allowing for different timings at the weekends, with central heating and hot water working independently for up to 3 heating periods each day.
- LP722Si – a 7-day program allowing for different timings on each day of the week, with central heating and hot water working independently for up to 3 heating periods each day.

If the engineer hasn't set your timings for you, your pro-grammer will work with a standard program that has been set at the factory. If this doesn't suit you, it's very easy to change it – when you've read this introductory section, sim-ply go to the section that contains your programmer model.

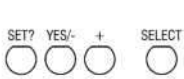

INTRODUCTION CONT...

Remember:

- Make your changes using the SET?, YES/-, and + buttons on the programmer, found under the bottom flap.
- You can't set ON1 as the last timing before midnight, but you can set OFF3 after midnight– providing it's not more than 23 hours and 59 minutes after ON1.
- You need to set the timings in sequence – i.e. ON1, OFF1, ON2, OFF2, ON3, OFF3. If you get out of sequence, the display will flash a warning.

SWITCHING	
ON 1	– start of first timed period
OFF 1	– end of first timed period
ON 2	– start of second timed period
OFF 2	– end of second timed period
ON 3	– start of third timed period
OFF 3	– final switch-off of the day

The engineer has set your program and timings–you won't need to do anything else. Just keep this guide in a safe place for future reference.

DAY-TO-DAY VARIATIONS

Sometimes you might need to change the way you use your central heating or hot water temporarily – perhaps due to an unusually cold day, or exceptional demand for hot water. Here's how to do it – without affecting your program.

Switching on and off

On the front of the programmer there are two **Advance/Boost** buttons – one for central heating and one for hot water. They allow you to switch your system either on or off, irrespective of the program. So if the heating or hot water is off, and you want warmth or hot water now, you can either –

1. Press **Advance** to switch it on (ADV will be displayed), and it will stay on until the end of the next period. Or if the heating/ hot water is on and you don't need it, press Advance and it will go off until the beginning of the next ON period.

   Advance will only operate in TIMED or ONCE modes.

2. Press & Hold **Boost** to switch on for an extra hour (b1 & BST will be displayed), then Press again for two (b2) or three (b3) hours.
   To cancel Boost, Press Boost again (b0). Or if the heating/hot water is already on, using Boost will extend the ON time by one, two or three hours.

Over-riding the program



On each side of the display there are four operating modes – one group for central heating, the other for hot water. You can change modes with immediate effect by using the appropriate SELECT button. This won't alter the timings in your program, which you can return to by selecting TIMED.

OFF	=	continuously off.
TIMED	=	on for up to 3 periods a day.
ONCE	=	on for 1 period a day, from the start of ON1 to the end of OFF3.
ON	=	continuously on.

THE LP241Si 24hr ELECTRONIC PROGRAMMER

LP241Si – a 24hr program, with central heating and hot water working independently for up to 3 heating periods each day, and every day the same.
If the timings haven't been set for you, then your programmer will still be on the factory-set standard 24hr program, with central heating and hot water operating to-gether on the same timings for every day of the week. But it's easy to make changes, and have heating and water working independently
– just follow the instructions.
Want to leave a timing as it is? Press SET? and move on to the next one.
If you need to reset your timings to the standard program and start again, press 'SET' and '+' together to go back to the pre-set program.
If you don't press anything for two minutes, the programmer automatically goes back to normal operation.

The standard program

Your system will come on for up to 3 heating periods every 24hrs. ON1 starts the first one, OFF1 finishes it, and so on. Notice that on the standard program ON2 and OFF2 are set to the same time for both central heating and hot water. * This means your system won't respond, but if you want to activate that middle period, or change any other timings – read on.

SWITCHING	STANDARD PROGRAM
ON 1 – start of first timed period	6.30am
OFF 1 – end of first timed period	8.30am
ON 2 – start of second timed period*	12.00pm
OFF 2 – end of second timed period*	12.00pm
ON 3 – start of third timed period	4.30pm
OFF 3 – final switch-off of the day	10.30pm

THE LP241Si 24hr ELECTRONIC PROGRAMMER Cont...

Changing the timings

- Press the SET? button and you'll see 'SET PROG?'.



Set the central heating

- Press the YES button, and the display will ask 'SET CH PROG?'.



- Press YES and you'll see ON1, the start of your first central heating period. Adjust it in- minute steps using the – and + buttons. If the – and + buttons are held down, the time changes in 10-minute steps.



- Press SET?, and you'll see OFF1, the end of your first central heating period. Adjust this in the same way, press SET?, then repat the procedure for ON2, OFF2, ON3 and OFF3.



Set the hot water

- When you press SET? after setting OFF3 for the central heating, the display will ask 'SET HW PROG?'.



- Press YES, then set your times in the same way. Remember, in this mode you can have different times to your central heating if you wish.

- When you press SET? after setting OFF3 for the hot water, the programmer will return to normal operation.

THE LP522Si 5/2-DAY ELECTRONIC PROGRAMMER

LP522Si – a 5/2-day program allowing for different timings at the weekends, with central heating and hot water working independently for up to 3 heating periods each day.

If the timings haven't been set for you, then your programmer will still be on the factory-set standard program. This means that central heating and hot water will operate together, with the same timings for weekdays and different ones for the weekend. But it's easy to make changes, and have heating and water working independently – just follow the instructions.

Want to leave a timing as it is? Press SET? and move on to the next one.

If you need to reset your timings to the standard program and start again, press 'SET' and '+' together to go back to the pre-set program.

If you don't press anything for two minutes, the programmer automatically goes back to normal operation.

The standard program

Your system will come on for up to 3 heating periods every 24hrs. ON1 starts the first period, OFF1 finishes it, and so on. Notice that ON2 and OFF2 are set to the same time.* This means your system won't respond, but if you want to activate that middle period, or change any other timings – read on.

SWITCHING	WEEKDAYS		WEEKENDS	
	HW	CH	HW	CH
ON 1 – start of first timed period	6:30am	6:30am	7:00am	7:00am
OFF 1 – end of first timed period	8.30am	8.30am	9:00am	9:00am
ON 2 – start of second timed period*	12.00pm	12.00pm	12:00pm	12:00pm
OFF 2 – end of second timed period*	12.00pm	12.00pm	12:00pm	12:00pm
ON 3 – start of third timed period	4.30pm	4.30pm	4:00pm	4:00pm
OFF 3 – final switch-off of the day	10.30pm	10.30pm	11:00pm	11:00pm

Schneider Electric Controls UK Ltd
401 Southway Drive
Plymouth
PL6 6QT
United Kingdom

Schneider Electric Industries SAS
1884 Boulevard de la Défense
92000 Nanterre France
se.com/contact

WARRANTY
T & C'S

THE LP522Si 5/2-DAY ELECTRONIC PROGRAMMER Cont..

Changing the timings

- Press the SET? button and you'll see 'SET PROG?'.



Set the weekday central heating

- Press the YES button, and the display will ask 'SET CH MON to FRI PROG?'.



- Press YES and you'll see ON1, the start of your first central heating period. Adjust it in 1-minute steps using the – and + buttons. If the – and + buttons are held down, the time changes in 10-minute steps.



- Press SET?, and you'll see OFF1, the end of your first central heating period. Adjust this in the same way, press SET?, then repat the procedure for ON2, OFF2, ON3 and OFF3.



Set weekday hot water

- When you press SET? after setting OFF3 for the central heating, the display will ask 'SET HW MON to FRI PROG?'.



- Press YES, then set your times in the same way. Remember, in this mode you can have different times to your central heating if you wish.

Set weekend central heating

- When you press SET? after OFF3 for the weekday hot water, the display will ask 'SET CH SAT SUN PROG?'. Press YES to confirm, and alter the times in the same way.



Set weekend hot water

- When you press SET? after OFF3 for the weekend central heating, the display will ask 'SET HW SAT SUN PROG?'. Press YES, and follow the procedure.

- When you press SET? after OFF3 for HW SAT SUN, the programmer will go back to normal operation.

THE LP722Si 7-DAY ELECTRONIC PROGRAMMER

LP722Si – a 7-day program allowing for different timings on each day of the week, with central heating and hot water working independently for up to 3 heating periods each day.

If the timings haven't been set for you, then your programmer will still be on the factory-set standard program. This has central heating and hot water operating together – with the option of having different timings for each day of the week. But it's easy to make changes, and have heating and water working independently – just follow the instructions.

Want to leave a timing as it is? Press SET? and move on to the next one.

If you need to reset your timings to the standard program and start again, press 'SET' and '+' together to go back to the pre-set program.

If you don't press anything for two minutes, the programmer automatically goes back to normal operation.

The standard program

Your system will come on for up to 3 heating periods every 24hrs. ON1 starts the first period, OFF1 finishes it, and so on. Notice that ON2 and OFF2 are set to the same time.* This means your system won't respond, but if you want to activate that middle period, change any other timings – read on.

SWITCHING	WEEKDAYS		WEEKENDS	
	HW	CH	HW	CH
ON 1 – start of first timed period	6:30am	6:30am	7:00am	7:00am
OFF 1 – end of first timed period	8.30am	8.30am	9:00am	9:00am
ON 2 – start of second timed period*	12.00pm	12.00pm	12:00pm	12:00pm
OFF 2 – end of second timed period*	12.00pm	12.00pm	12:00pm	12:00pm
ON 3 – start of third timed period	4.30pm	4.30pm	4:00pm	4:00pm
OFF 3 – final switch-off of the day	10.30pm	10.30pm	11:00am	11:00pm

Changing the timings

- Press the SET? button and you'll see 'SET PROG?'.

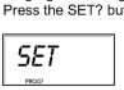

THE LP722Si 7-DAY ELECTRONIC PROGRAMMER Cont..

Set all Weekdays

First you set the times that are going to be the same for each weekday, then you can select each day individually and make any further adjustments. If you want each day to be quite different,go straight to 'Set each day.'

- Press the YES button, and the display will ask 'SET MON to FRI PROG?'.



- Press YES and the display will ask 'SET CH MON to FRI PROG?'.



- Press YES you'll see ON1, the start of your first central heating period. Adjust it in 1-minute steps using the – and + buttons. If the – and + buttons are held down, the time changes in 10-minute steps.



- Press SET?, and you'll see OFF1, the end of your first central heating period. Adjust this in the same way, press SET?, then repeat the procedure for ON2, OFF2, ON3 and OFF3.



- When you press SET? after setting OFF3 for the weekday central heating, the display will ask 'SET HW MON to FRI PROG?'.



- Press YES, then set your hot water times in the same way. Remember, in this mode you can have different times to your central heating if you wish.

Set each day

If, after you've set OFF3 for your hot water, you want to fine-tune one or more weekdays, press SET? until you find the first day you want to adjust – then go through the procedure, altering any time you wish. Press SET? to move on to the next day. When you've finished, press SET? until you see 'SET SAT SUN PROG?'.



If you don't want to alter any individual days, keep pressing SET? until you see 'SET SAT SUN PROG?'.



Set weekend

- Press YES, and alter the central heating and hot water times in the same way.

- When you press SET? after OFF3 for HW SAT SUN, the programmer will ask the question TEST? If you want to test your program, see below, otherwise press SET? again. If you don't want to test your program, press SET? again – and you'll be asked the question SET H'DAY? If you want to set a holiday switch off, see page 23, otherwise press SET? again.If you're not going to program in a holiday switch-off, then press SET? again and your programmer will go back to normal operation.

SERVICE INTERVAL FEATURE

Applicable to all models.

If your installer has configured the 'service interval' feature, then your programmer will display the following information.

- 30 days before the next 'service' is due it will display;

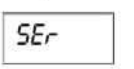

- then



- then



- and then revert to the normal time display.

The display will cycle continuously. When you see this it means; SERVICE DUE ON 25th DECEMBER.

SERVICE INTERVAL FEATURE Cont...

You should contact your service engineer to arrange a service

- When the 'service' is due it will display;

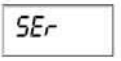

- An audible alarm will sound; push any button to snooze the alarm for 24hrs

If you haven't already arranged for a service, you should contact your service engineer immediately.

SETTING THE CLOCK AND DATE

Applicable to all models.

SETTING THE CLOCK

The clock in your programmer has been set at the factory, and automatically accounts for British Summer Time. However, should you need to set the clock, read on.

- Press the SET? button until you see SET CLOCK?



Set the hour

- Press YES once, and then the hour will start to flash. Use the – and + buttons to set the hour, checking for AM and PM.



Set the minute

- Press SET?, and the minutes will start to flash. Use the – and + buttons to set the exact time.



- Press SET?, and 'SET DATE?' appears in the display. if you don't want to change the date press SET? to go back to normal operation. If you do, go on to the next section.

SETTING THE DATE

The weekday is automatically calculated from the date, so if the weekday is incorrect you'll need to reset the date.

- Press SET?button untill you see SET DATE?



Set the year

- Press YES and the year will start to flash. Use the – and + buttons to adjust.



Set the month

- Press YES and the month will start to flash. Use the – and + buttons to adjust.



Set the day

- Press SET? and the day will start to flash. Use the – and + buttons to adjust.



Set the Day Light Saving

- Press SET? and the current DLS status will start to flash for day. light saving (British Summer Time). Use the – and + buttons to turn on or off.



- Press the SET? to go back to normal operation.

Recycling



Batteries, rechargeable or not, should not to be disposed of into ordinary household waste. Instead, they must be recycled properly to protect the environment and cut down the waste of precious resources.

Your local waste management authority can supply details concerning the proper disposal of batteries.

This product should not be disposed of with household waste. Please recycle the products where facilities for electronic waste exist. Check with your local authorities for recycling advice.

USERS NOTES

Technical Helpline: 0333 6000 622

Email: customer.care@draytoncontrols.co.uk

Web: www.draytoncontrols.co.uk

← **Installer note: After installation, tear along perforations indicated and retain this section - only leave the User instructions with the end user**

WIRING THE PROGRAMMER Cont..

Connection Charts

Gravity HW, Pumped CH with Room Stats

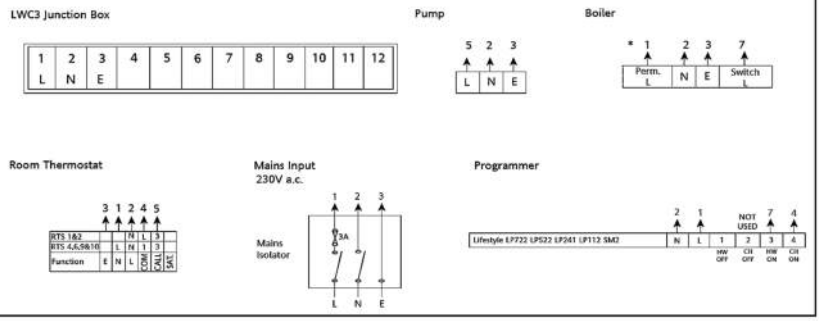

Mid-Position Valve System

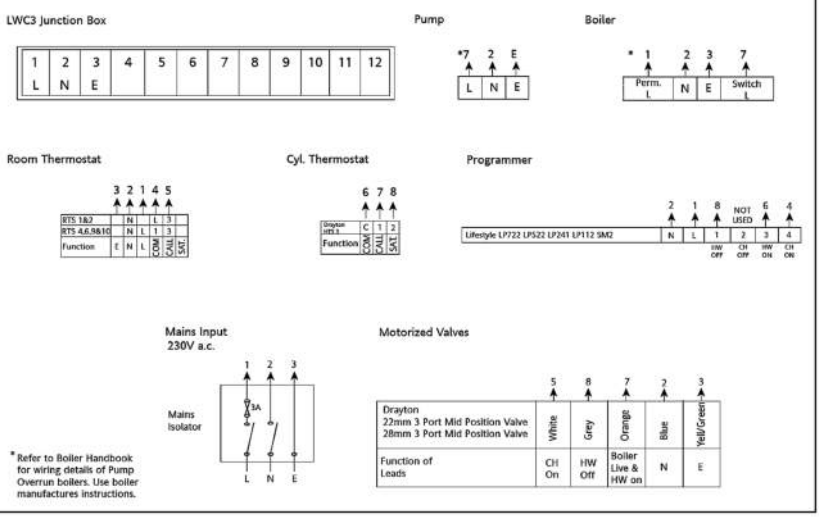

* Refer to Boiler Handbook for wiring details of Pump Overrun boilers. Use boiler manufactures instructions.

Spring-Return 2-Valve System

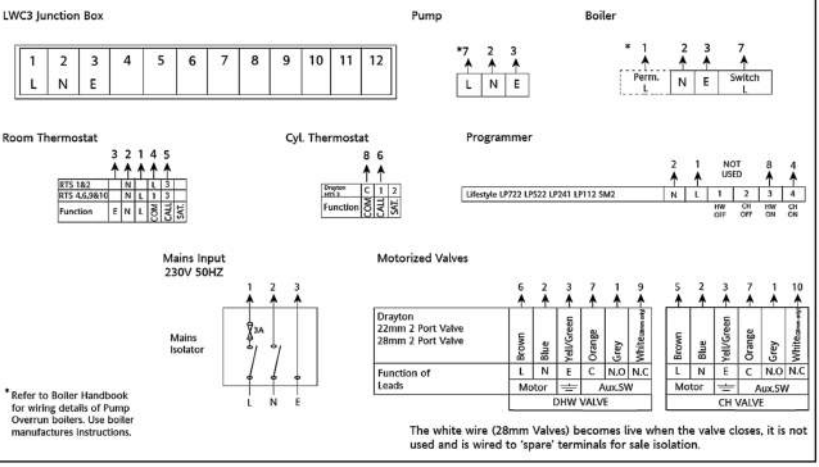

* Refer to Boiler Handbook for wiring details of Pump Overrun boilers. Use boiler manufactures instructions.

The white wire (28mm Valves) becomes live when the valve closes, it is not used and is wired to 'spare' terminals for sale isolation.

Make the wiring connections, as above, for the appropriate system.

For surface wiring, snap out the cable entry strip on the bottom edge of the wall-plate. Lifestyle units are double-insulated and need no earth connection, but an earthing continuity (loop) terminal is provided for convenience.

After wiring, plug in the unit and tighten the securing screws. Check the mains input has a 3A fuse, and switch on the mains. Then set the timings as shown in the User's Guide.

ALWAYS SWITCH OFF THE MAINS BEFORE REMOVING THE LIFESTYLE TIMESWITCH/PROGRAMMER – AND NEVER FIT IT TO A LIVE WALL-PLATE!

SERVICE INTERNAL FEATURE

Applicable to all models.

If you wish to activate, or adjust, the settings for the 'service interval' feature then please refer to the instructions for the service interval (LP Si) reset module [SOLD SEPARATELY]

INSTALLERS/ENGINEERS NOTES

Technical Helpline: 0333 6000 622
Email: customer.care@draytoncontrols.co.uk
Web: www.draytoncontrols.co.uk

← **Installer note: After installation, tear along perforations indicated and retain this section - only leave the Userinstructions with the end user**